NEMA 34 Motor Mount (904 009)

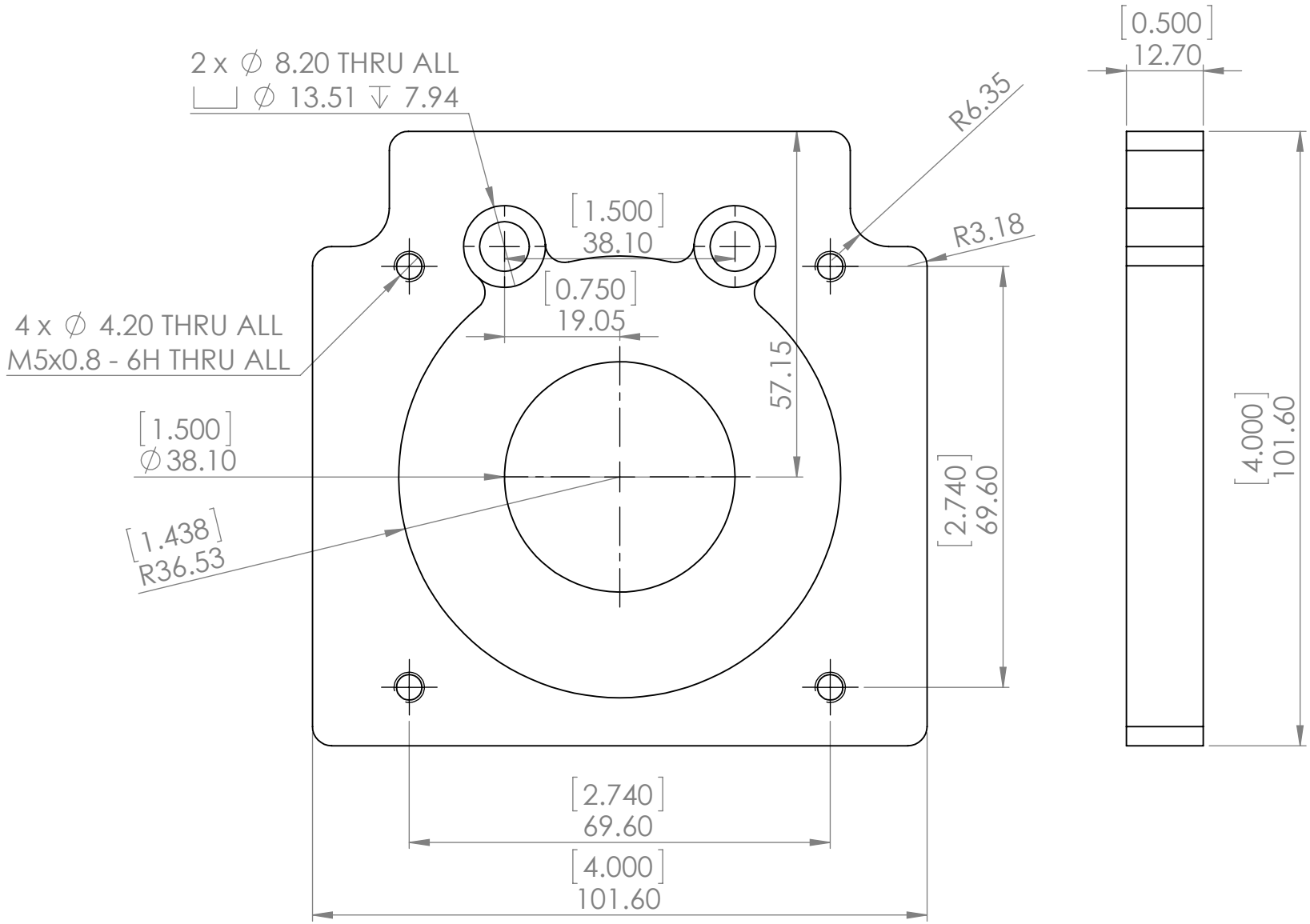

[in]
mm

FINELINE AUTOMATION

Updated 9/29/2017